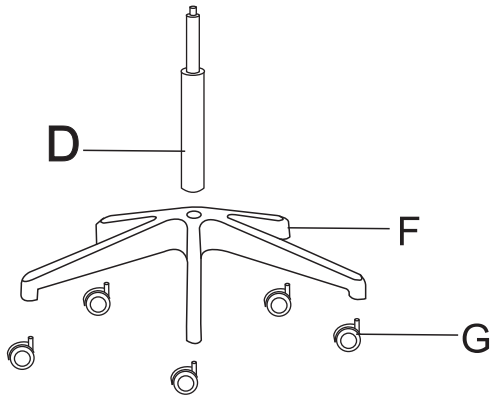

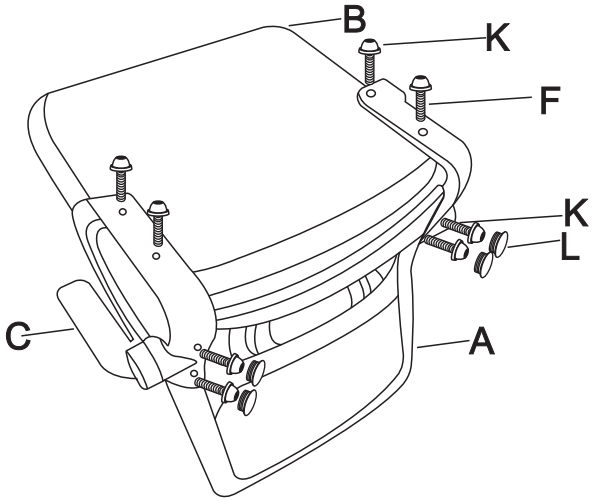

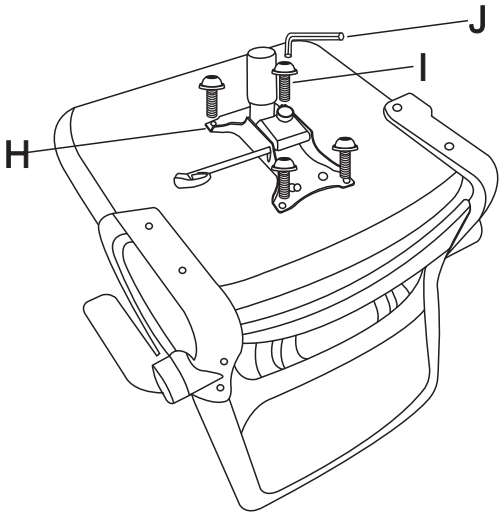

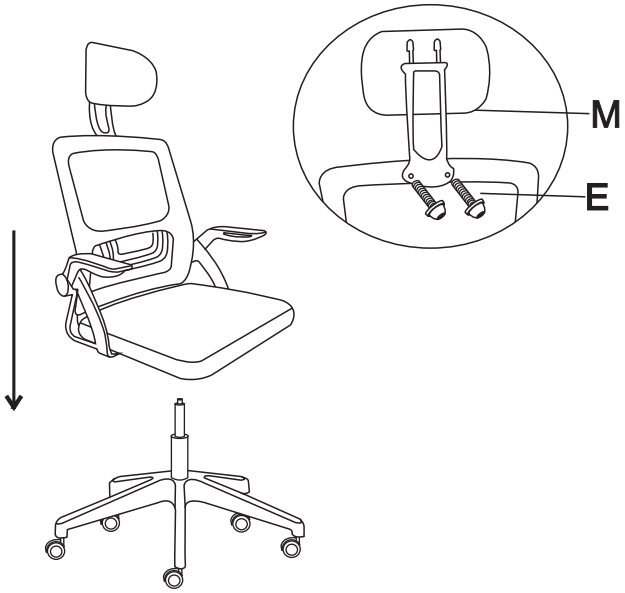

A 1	B 1	C 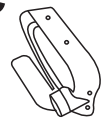 2	D 1
E 2	F 1	G 5	H 1
I 4	J 1	K 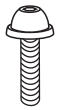 8	L 4
M 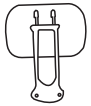 1			